ANTI-TANK

June 15, 1997

Dear Lt. Col. Lewis,

Our Antitank President, Henry Ikemoto asked me to send you some literature about our Antitank Company as it relates to the 517th Parachute Regimental Combat Team. My name is Tak Hattori and I was Communication Sgt. when we were overseas with the 442nd and the 517th. Now I am secretary and Newsletter reporter for the Antitank Chapter of the 100/442 Veterans Association.

I have compiled some printed articles and literature from various sources. You may use and edit whatever you can use. Henry included some pictures, but they are such poor quality that they most likely are unusable. But you may be able to use some of the pictures and words on Page 2 and 3 from the KAMAI FORUM Newspaper.

I remember when we joined the 517th, they welcomed us with open arms. They were **very** protective of us and whenever there was any conflict or disputes with other soldiers or civilians, they would not let us lift a finger. They always told us to stand back and they would take care of the fighting or conflict. I remember just before they were to take off for the invasion, there was an Italian produce truck drove up with melons. Some of the paratroopers went over and helped themselves to watermelons and brought some over to us. We had a watermelon feast. When the Italian wanted money, they reached down and pulled out their trench knives. The Italians jumped into their trucks and scattered.

We were very proud to have served with the 517th and to the man, every Antitanker wears the glider badge and glider pin with pride. Within the 442nd, we were unique in that we took part in the glider invasion of Southern France.

Under Part II of the Kamai Forum paper, I wrote my personal experience of the Southern France Invasion. On the second page, I was in the hospital with a paratrooper, and when they were going to move the hospital closer to the front lines and ship us remaining patients back to Italy, my paratrooper friend and I decided we would hitch-hike back to our outfit. This is known as a reverse AWOL. Sadly, I don't remember his name, but if we were to meet again, I'm sure we would have a lot to talk about. I hope some of this material will be usable. Sincerely, Tak

My address is: TAK HATTORI
5309 Maricopa St.
Torrance, CA 90503-2736
Ph. (310) 371-1724

517th PRCT

PARACHUTE REGIMENTAL COMBAT TEAM ASSOCIATION

Don't be left out of our history book!

Time is running out for you to be a part of Turner Publishing Company's 517th Parachute RCT history book! Produced with the full cooperation of the Association, it will be OUR story with biographies of association members, special stories told by the men who were there to witness the action, and personal photographs.

I can't tell you how important your support of this project is! You are the only ones who can tell these stories. The book will be a treasured keepsake to hand down to your children and grandchildren, a wonderful legacy to leave your families and the world. Libraries, museums and other veterans will want this historic book.

I know you are proud of your accomplishments - do you want them to be lost to history forever? I invite you to submit your personal stories and photographs for inclusion in this once-in-a-lifetime publication.

Fred Brown
President

HOW TO PARTICIPATE

- Submit your 150 word personal biography using the samples on the next page as a guide.
- Submit a biography for a deceased member, spouse, or family member. Children and grandchildren will want this memory.
- Submit a recent photo as well as a photo of you as a 517th Parachute RCT member
- Optional: Send in your personal stories from your time in the 517th Parachute RCT (2000 word limit).
- You don't have to order a book to be included.
- All materials will be returned to you upon publication.

EXTENDED DEADLINE: Feb. 28, 1997

517th PRCT

History Book

Share the Memories!

The 517th Parachute Regimental Combat Team Association and Turner Publishing Company are in the final countdoown of accepting material for the *517th Parachute Regimental Combat Team History Book*. This is **OUR** book including **OUR** biographies, **OUR** special stories, and **OUR** personal photographs.

I can't tell you how important your support of this project is! You are the only ones who can tell these stories. The book will be a treasured keepsake to hand down to your children and grandchildren. What a wonderful legacy to leave your families and the world. Libraries, museums and other veterans are ordering this historical book.

I know you are proud of your accomplishments - do you want them to be lost to history forever? I have submitted my biography and story and now I invite you to submit your personal stories and photographs for inclusion in this once-in-a-lifetime publication.

Bill Lewis

Lt. Col. William Lewis, AUS (Ret.)

FINAL DEADLINE IS JULY 4, 1997

8/97

HERE IS ALL YOU NEED TO DO BEFORE JULY 4, 1997

- Submit your 150 word personal biography to Turner Publishing Company in Paducah, KY along with two photos: one photo of you when you were in the service and another, more recent photo. Please see the inside of this brochure for instructions on composing your own biography.
- Write a story about an experience you had while serving with the 517th PRCT. (2000 words)
- Submit any historical photographs that you would like to have included in the book.
- You do not have to order a book to be included and *all material will be returned to you after the book has been published.*
- Don't worry about your writing skills. Turner Publishing Company editors will make your story suitable for publishing!

Publishers Turner®

The Front Line of Military History

Turner Publishing Company is the world's largest publisher of military veterans association histories, having published more than 400 titles for Army, Air Force, Navy, Marine, and Coast Guard Associations. To order a catalog for $2.00, call 1-800-788-3350.

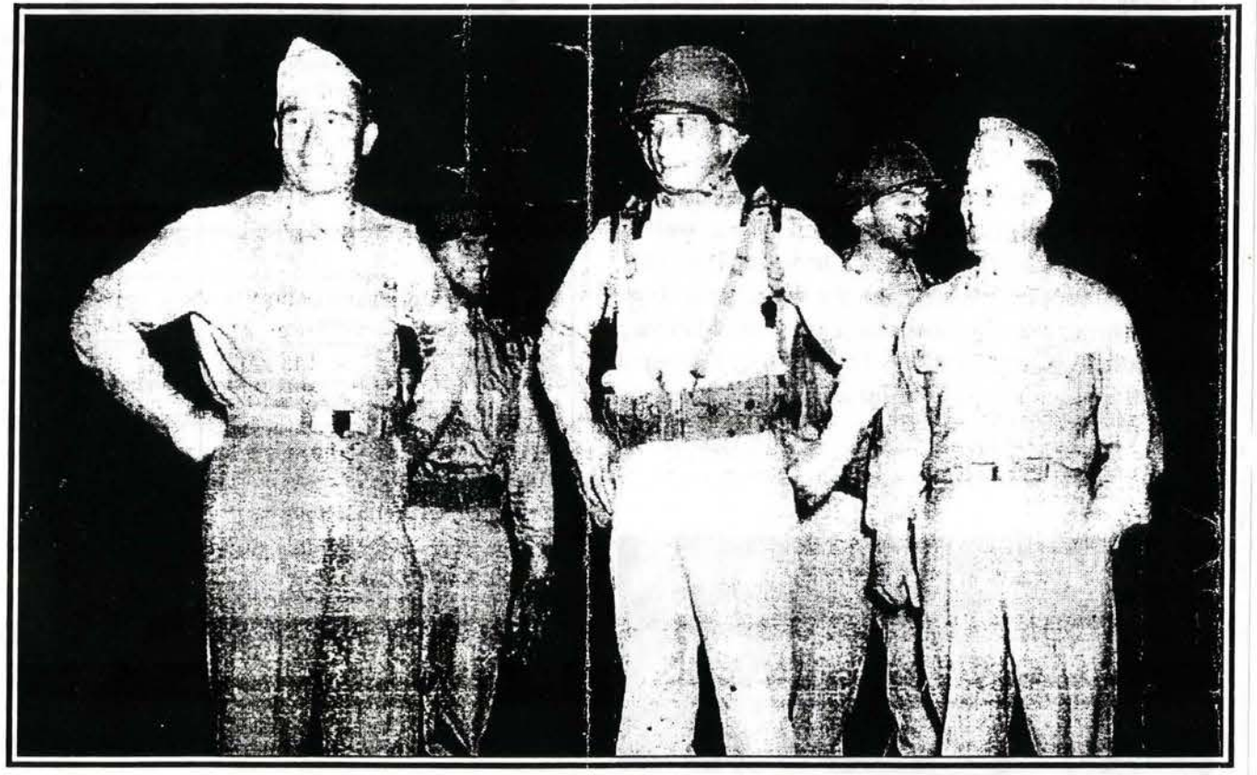

517th PRCT History Book
Turner Publishing Company
P.O. Box 3101
Paducah, KY 42002-3101

HENRY IKEMOTO (442-AT)
8309 COMOLETTE AVENUE
DOWNEY, CA 90242-4401

PADUCAH KY APR 17 '97

U.S. POSTAGE

METER 500

SAMPLE BIOGRAPHY

CHARLES E. PUGH, D.D.S , born Nov. 1924, is a native of Paducah, KY. Volunteered for military service March 1943. Accepted for paratroops at Camp Toccoa, GA in April 1943 and assigned to C Company of the 139th Abn. Engineer Bn. of the 17th Abn. Div. Basic training at Camp Mackall, NC and completed jump training at Ft. Benning, GA in July 1943. The 517th Parachute Regimental Combat Team was formed after the Tennessee maneuvers, removed from the Division, and sent to Italy in May 1944.

Dr. Pugh participated in five battle campaigns in Europe and parachuted into southern France in Aug. 1944. He received two Purple Hearts for wounds and was awarded the Bronze Star Medal. He was honorably discharged in Nov 1945.

He attended Murray University and Baylor Univ College of Dentistry 1946 through 1950 and has practiced general dentistry in Ft. Worth, TX since graduation.

Dr. Pugh was selected by his peers to be honored as Texas Dentist of the Year in 1979 He has been active in community affairs, civic organizations, and the Episcopal Church. He is a member of Mensa. He is married to playwright and author Ann Pugh and they have two sons, a daughter, four grandsons, and a granddaughter.

His hobbies are writing, reading, photography, philately and golf. He edits and publishes an international stamp journal. He served as President of the 517th Parachute Combat Team Association from 1983-85.

We encourage widows and family members to record the memories of their loved ones for future generations.

Use the biography above as a guide in writing your biography. There is a 150 word limit for each biography. A .15¢ charge will be added for each word over the 150 word limit.

When composing your (or your loved one's *) biography, please include the following information:

FULL NAME AND DATE OF BIRTH
DATE INDUCTED INTO SERVICE
MEMORABLE EXPERIENCES
AWARDS/ MEDALS RECEIVED
DATE OF DISCHARGE AND RANK
FAMILY DATA MARRIED/CHILDREN/GRANDCHILDREN
WORK/ CAREER EXPERIENCE
WHAT ARE YOU DOING TODAY?

**please include date of death*

It is important that you print clearly or type for our editor's in deciphering your story. If we can't read it, we can't publish it!

SAMPLE STORY

CHRISTMAS 1944 ON THE ROCK AND THE FIRST CONVALESCENT HOSPITAL

Taken from the 11TH AIRBORNE history book, also published by Turner Publishing Company

Tomorrow is Christmas 1944. I had done all the good and, to some, damage that could be done for a young paratrooper so we and a lot of wounded soldiers were taken by LST around the island to Dulag and the First Convalescent Hospital. The hospital would become my refuge from General Swing's wrath until it was time to go to Mindoro and prepare for the jump on Tagaytay Ridge and the dash to Manila. At the same time we were entering the First Convalescent hospital at Dulag on Christmas Day, the rest of the Regiment under the command of Colonel Haugen was starting their final push off Mt. Mahonag and its tributaries, down the mountain and into rest camp at Bito Beach south of Dulag where we originally landed on November 18th.

The Battle for Leyte, for all intents and purposes, was now over for the 3rd Battalion, 511th, as well as the other two battalions. It was Christmas Day 1944 that the 511th broke loose from the bondage to Rock Hill and broke out of the mountains of the Mt. Mahonag Range to the Ormoc Corridor. The 187th had escorted General Swing up to, and as far as, Rock Hill and the 511th.

Do you remember a funny or memorable moment while with the 517th PRCT? If so, then you've got a story. Write it down for inclusion in this book. Afterall, it is your history book!

517 ATTACK 1943 1945

PARACHUTE REGIMENTAL COMBAT TEAM

Pictured above is the proposed cover for the 517th PRCT history book. This new book will contain the stories and biographies of 517th PRCT veterans and will be printed using high-quality, acid-free paper with a durable, archival style binding for the book to be passed on to generations to come.

517th PRCT HISTORY BOOK CONTENTS

- Infantry, Artillery, Engineer, & 442nd Tank Company histories
- Awards & Decorations, MIA, KIA Lists
- History of the Association
- Recollections from the men of the 517th
- Biographies & photos of 517th veterans
- Membership roster
- Hundreds of historic photographs
- Index

This hard-bound 9x12 inch book is sure to become a collector's item, popular with libraries, museums, veterans, and will be cherished by your family for years to come.

You can even personalize your copy by having your name or a loved one's name embossed on the cover. Surprise your veteran with this memorable gift.

517th PRCT	QTY	PRICE	TOTAL
Deluxe Edition		$ 49.95	
Deluxe, Grained, Bonded Leather Edition (Embossing Included)		$ 84.00	
Embossing Charge		$5.00	
KY Residents add 6% sales tax			
Shipping/ Handling: $5.00 for first book; $3.50 for each add'l book			
Biograhpy charge: 15¢ per word over 150 word limit		.15¢	
Protective, plastic book cover		$3.00	
Total			

Please print the name to be embossed on cover here (up to 24 spaces)

Mail all materials to: **517th PCRT**
Turner Publishing Company
P.O. Box 3101 • Paducah, KY 42002-3101
(502) 443-0121

Your Name (Please Print)

Address

City State Zip

Telephone

517 FINAL-HB- For Office Use Only
Bio_____ Ck#_____
# of photos_____ Amount_____
Bio photo#s_____ Emboss Code___
Other photo#s_____

ANTITANK CO. 100/442 REGIMANTAL COMBAT TEAM
ATTATCHED TO THE 517 PARACHUTE RCT.

On July 14 the company was given orders to withdraw from the lines. The men guessed and commented as to what the reason was for this withdrawal. The only thing known was that we were to proceed to Rome under secret orders. On the 15th the company moved out on its way to Rome. The trip was made without mishap.

GLIDER TRAINING AND SOUTHERN FRANCE

In Rome we set out for the Gallera Airfield, and thru the cooperation of the Air Corps, arrangements were made to bivouac there. As ordered, the company commander reported to the Headquarters of the First Airborne Provisional Division in Lido di Roma. It was there learned that the company was going to take glider training. We were to operate as a separate company.

For the next twelve days the company was bivouaced on the airfield. During this period the tables of organization for a glider borne Antitank Company were worked out. Requisitions for needed supplies were processed by biweekly trips to Naples.

The company instigated training to harden the men physically for an Airborne Invasion. A British Major of a Glider-Borne Antitank Brigade gave a short talk on Glider Training. He said that the gliders were the safest things in the air because there were no motors to go wrong. He also gave us many hints on loading and lashing.

On July 28 the company moved to Marcigliana Airfield on Route 4 north of Rome to take final glider training. Shortly prior to this movement, British 6-pound AT guns were substituted for our 57mm AT guns. The 57mm AT guns were not suitable for loading, lashing, and unloading.

On August 3 and 4 the entire company completed two tactical flights and became qualified glider-borne troops. Every member of the company was entitled to wear the glider badge.

On August 5 the company moved to a new bivouac area in the vicinity of Frascati, just south of Rome, to await future orders. We were then attached to the 517th Parachute Infantry Regiment, a part of the First Airborne Task Force.

Here the prime movers were substituted for jeeps. The trucks were to follow us by sea-tail on a later date under the supervision of S/Sgt. Nishio.

On August 11 Lt. Scotland, assisted by Lt. Rogers, took the third platoon and part of the fourth platoon to a dispersal field at Ombrone. The following day the remainder of the company, less the sea-tail party, moved to Orbetello Airfield. At these two fields final preparations for the glider flight were completed.

All plans were completed and the company was ready for the Invasion of Southern France. On August 15 at about 1530 hours the company assembled around their respective gliders. This was D-Day. There were 44 gliders for the company. This was it. At 1600 hours the first glider became airborne. With the exception of one glider, all planes on the field took off without mishap. This one glider, under the supervision of Sgt. Hirose, was quickly reloaded and was able to take its place in the formation.

The trip across the Mediterranean Sea to the coast of France was uneventful. Slight flak was encountered as we reached the coast. One glider carrying T/Sgt. Kawamura was hit by the flak and part of the tail was knocked off. As we approached the landing zones, visual reconnaissance was commenced by all so that previously made plans could by carried out. At 3000 feet, instead of the prescribed 100 feet, the gliders were cut off from the C-47 tug planes. Many pilots, upon approaching the ground, discovered that all was not as shown on the aerial photos used during the briefing. This fact caused considerable confusion and mix up in the landings. The terrain was covered by grape arbors of stout timber and hedge rows were a good deal higher than anticipated. All of these factors produced rough landings, some of them fatal.

Immediately upon landing, each man proceeded with his assigned mission. Gliders were unloaded and crews started out for the prearranged company assembly area. At the assembly area the company was hastily regrouped. Lt. Meier and Lt.

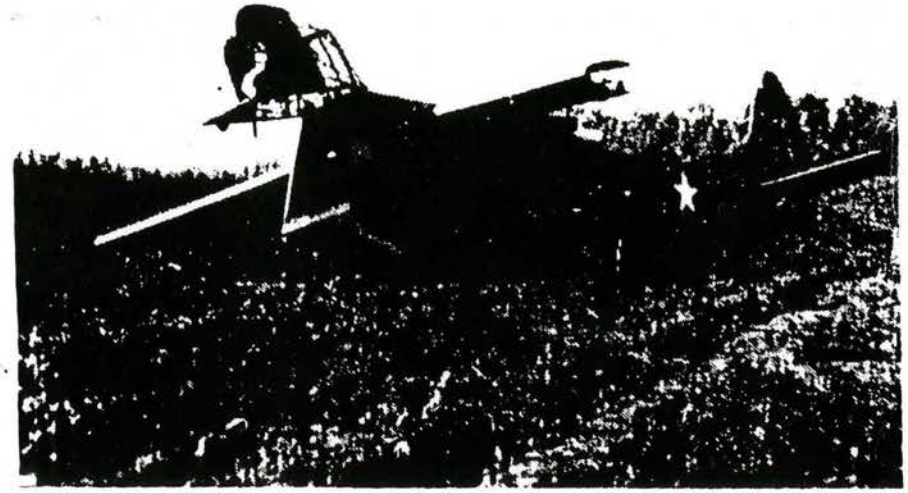

Scotland, with their platoons, proceeded to their designated positions. The rest of the company remained at the assembly area and were outposted for security. At this time an assessment of the casualties was taken. It was discovered that nine men were injured in the landings, six of whom were evacuated to the 517th Regiment Aid for treatment. As the British Second Independent Airborne Brigade had not taken the town of Le Muy as scheduled, this mission was assigned to the 550th Parachute Infantry Battalion. To forestall any enemy infiltration, the 2nd and 4th platoons were given positions blocking the road between Le Muy and the 517th Regimental Command Post.

On the 16th, contact was made with the seaborne units, the 45th and 36th Divisions. The company was relieved of its mission and moved to a bivouac area one mile south of Le Muy. The following day the company was preparing to remain in their location for a protracted period, but orders came, alerting the company. A Frenchman came to the CP and stated that there were five Germans hiding near his house. A patrol was organized and set off under Lt. Schettler and a guide. In order to accomplish this mission the patrol was split up into three groups. The group under S/Sgt. Yano encountered and captured the five Germans. Shortly after the patrols' return, the company left the area to take up positions with the 517th. The mission of the Task Force was now to protect the exposed right flank of the 7th Army. Due to this wide area given the 517th, all three battalions were committed. One gun platoon from the

company was attached to each of the battalions. The company's mission from this time on in southern France was to give the 517th Parachute Infantry anti-mechanized protection.

On the 20th, Lt. Rogers and his "mine laying maniacs" were told to sweep and clear the town of St. Cezaire of mines and booby traps. This was done with the utmost of efficiency and the fact that many of the mines were booby trapped made it evident that the mine platoon had done an excellent job.

On the 24th of August, Lt. Schettler and Sgt. Inaba, while making a reconnaissance for a possible forward supply route, encountered and captured two Germans. These prisoners were turned over to the 517th POW officer.

On the 26th, Lt. Rogers was notified that there were six Germans in a house near St. Valliers. He proceeded to St. Valliers with a nine man patrol and captured the Germans.

On the 30th, S/Sgt. Yano, while trying to contact the forward platoons, encountered and captured two prisoners at Tourette Levens, turning them over to the Canadian Special Service Forces in that area.

On the 31st of August, Pfc. Nakahara, jeep driver from the 1st platoon, drove the 1st Bn S-2 and a four man patrol to Turrins near the Italian border. The patrol came under intense mortar and small arms fire. The jeep was stopped and as Pfc. Nakahara attempted to remove the jeep to safety, he was wounded in the leg. On his second attempt to remove the jeep, he was hit in the leg again. He attemted the third time and was wounded in the back. Suffering from considerable loss of blood, he was evacuated to a French Hospital nearby. For this heroic action he was awarded the Silver Star Medal.

On the 5th of September, S/Sgt. Nishio and the sea-tail element of the company arrived to join us. With them came our kitchen equipment and our organic transportation.

By the 11th of September, the 517th had taken positions overlooking the town of Sospel, which was heavily defended by the Germans. The 1st platoon had positions in the vicinity of Pierra Cava, the 2nd platoon was at Luceram, the 3rd platoon was at Col de Braus, the 4th platoon was guarding the tunnel entrance at Touet de l'Escarene, and the company command post was located at the railroad station in l'Escarene. It was here that the men got better acquainted with the populace of Southern France, for here and the month to follow the company held the same positions.

On the 20th of October, the company was relieved by the 522nd Antitank Company. We withdrew from the lines and moved to a bivouac area on the outskirts of Nice.

After a two day rest, the company convoyed north to rejoin the 442nd RCT. The company reached Bruyers, France on the evening of the 27th. We moved into a bivouac area near Service Company. Before we had a chance to say "hello" to old friends, the company was committed to action.

Kamai Forum
COMMUNITY ACTIVITIES AND PERSPECTIVES

PAGE 2

ANTI TANK COMPANY, 100TH/442ND REGIMENTAL COMBAT TEAM — PART II

There were occasions when the mountainous terrain of the battlefield precluded the utilization of antitank guns which are drawn by one ton trucks, the tactical assumption being that the enemy would also have difficulty maneuvering tanks over the same mountainous terrain. The antitank company then functioned as utility troops as litter bearers to evacuate the wounded, carry rations and ammunition and otherwise as needed.

On July 14, 1944, the Antitank Company was ordered to withdraw from the lines and proceed to Rome under secret orders. On the 15th they moved out. In Rome they bivouacked at the Gallera Airfield. The company commander reported to the headquarters of the First Airborne Provisional Division in Lido di Roma as ordered and learned that the company would now undergo glider training. They would be a separate glider borne antitank company.

Walter Cronkite rode a glider during combat in Europe as a war correspondent. He said of the experience, "It was a lifetime cure for constipation." Gliders were at

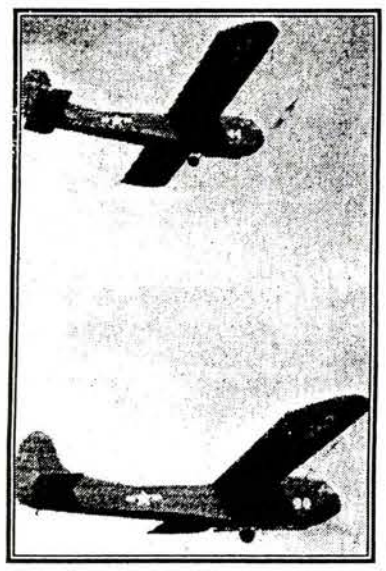

the vanguard of almost every major U. S. engagement of the war: D-Day in Normandy, the Battle of the Bulge, and even into Mandalay. The gliders were used as transport: of men, fuel, ammunition, Jeeps and medical supplies. The gliders flew only once, the original throw aways.

Two weeks of training for the men of the Antitank Company consisted of learning how to load equipment onto the glider for balance and to tie it down. They then moved to Marcigliana Airfield north of Rome for their final glider training, two flights in a glider to experience flight in a glider and to qualify for their glider badges. On 3 August 1944,

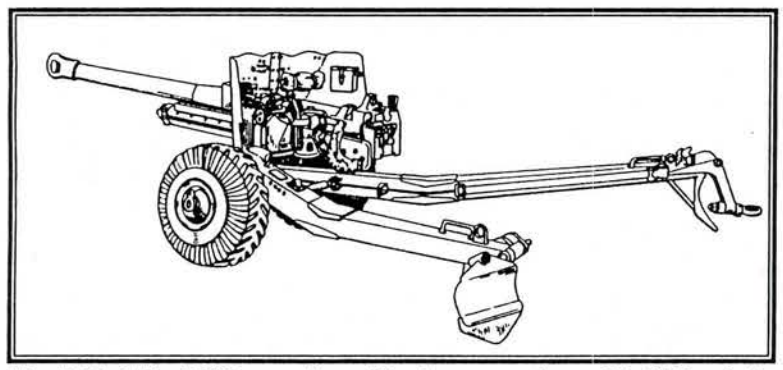

The British Mark III 6-pounder antitank gun was issued to Glider Antitank Batteries.

168 men of the Antitank Company from first lieutenants to privates were awarded the Glider Badge. On August 5 the Antitank Company was attached to the 517th Parachute Infantry Regiment, a part of the First Airborne Task Force.

The glider as a combat flying object was the brilliant conception of Adolf Hitler. By early 1940 he had subjugated Austria and the Sudetenland of Czechoslovakia and had divided Poland with Russia. He then turned his attention to the conquest of Northern Europe. The impregnable Belgian fortress of Eben Emael stood in the way of his war path toward the invasion of Belgium, Holland and France. The fortress towered over several key bridges at the juncture of the Meuse River with the Albert Canal. The German High Command estimated that it would take 6,000 ground troops months to seize the heavily armored installation. Hitler then conceived the plan of using the new untested glider.

Before dawn on May 10, 1940, ten gliders carrying 78 men landed on the 1,000 yard roof of the fortress. The men burst out of their gliders and ran to the fort's steel cupolas which they quickly piled with 100 pound demolition charges. The force of the blast tore into the bowels of the fort incinerating the gun crews and soldiers inside. Twenty-eight hours later the 780 man garrison surrendered. Six Germans were killed, twenty wounded.

This provided the impetus for the British to develop military gliders followed by the Americans who were goaded into action after Pearl Harbor.

On August 15, 1944, at about 1530 hours, the Antitank Glider Company assembled around their respective gliders. There were 44 gliders in this company. At 1600 hours the first glider became airborne. This was their D-Day, called Operation Dragoon. Second in scope to Normandy, it was an amphibious landing and air drop on the French Riviera's Cote d'Azur between Hyeres and Cannes. It involved 300,000 men, 1,000 ships and thousands of warplanes. The vanguard of 10,000 men consisted of the 1st Airborne Task Force which included the 517th Parachute Regiment to which the Antitank Company was attached, 460th Parachute Field Artillery, 550th Glider, 509th and 551st Parachute Infantry Airborne battalions, the 596th Airborne Engineer Company and the British 2nd Independent Parachute Brigade.

A glider has no motor. During training a British Major told the men of the Antitank Company that gliders were the safest thing in the air because there were no motors to go wrong. Maneuverability is its only advantage. With no motor the pilot has to fly right the first time.

The glider, a flying box car, consisted of a fabric-covered tubular steel frame with plywood flooring. With a wingspan of almost 84 feet it could carry a pilot, co-pilot and thirteen infantrymen. In

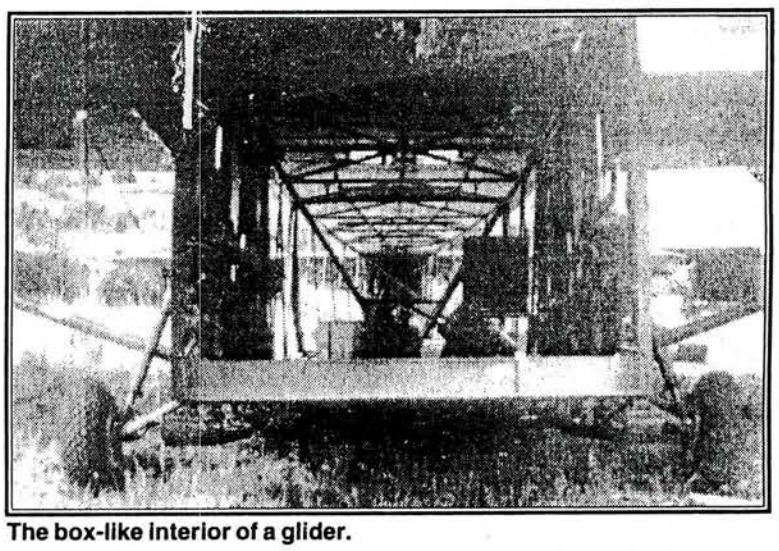

The box-like interior of a glider.

terms of materiel it could carry a 75 mm howitzer, a bulldozer or a Jeep. As for the antitank gun, it carried the British Mark III 6-pounder antitank gun which replaced the American 57 mm antitank gun. The 57 mm antitank guns were not suitable for loading, lashing and unloading from the gliders.

It is towed by a C-47 tow plane. The umbilical cord is a nylon rope about 1 1/2" in diameter. When airborne and the tow rope stretched, the glider is about 150 feet behind the tow plane. The pilot and co-pilot of the glider are warrant officers of the Army Air Force. The men of the Antitank Company were responsible for loading and unloading the equipment. During the flight they were passengers. No seat belts in this flying boxcar unless you rigged something yourself. Before takeoff they had seen aerial photos of their landing areas, but two dimensional photographs do not indicate height. What looked like bushes were tall trees. Telephone lines do not appear in photographs. While airborne they are being shot at. The covering of a glider is a flimsy fabric. Frank Seto said he poked his finger through it.

The paratroopers were to jump in and secure landing fields for the gliders. The gliders would follow with anti-tank guns, jeeps, troops, ammunition and supplies. The gliders were supposed to come in three waves, but all three waves arrived at once. The gliders were severed from their tow planes at 3000 feet instead of the prescribed 300 feet because of flak. Now the gliders were subject to 3000 feet of flak. They had to try to recall the spaces where they were to land and because the photographs are not three dimensional the reality was not what they pictured and too many gliders were aiming for landing in the same space. Frank Seto's glider hit one of the trees and then flew into a mountain. Totaled the jeep his glider was carrying. Upon landing each man proceeded with his assigned mission. (Sources: Schettler, Fukunaga, Sakimoto. Company History Antitank Company, 442nd Infantry, Regimental Combat Team; McAuliffe, Kathleen. On Silent Wings; Caraccilo, Dominic J. Dragoon Clears the Rhone Valley; Hattori, Tak. Anti-tank Company, 442nd RCT)

Southern France Invasion
August 15, 1944
My personal experience
Tak Hattori

The Antitank Company of the 442nd RCT joined the 517th Parachute Infantry Regiment in the invasion of southern France on August 15, 1944. The 517th spearheaded the southern France invasion. They were the first American troops to land in southern France. They parachuted in and secured the fields for our gliders to land. The Antitank Company followed in gliders with antitank guns, Jeeps, trailers filled with ammo and the entire Antitank Company.

The flight across the Ligurian Sea was uneventful and smooth. There was no sign of a war until we approached the coast of southern France. We could see in the distance black puffs of smoke. To airmen this meant flak. In order to avoid the flak the tow pilots took us up several thousand feet to release us instead of releasing us at several hundred feet as they were supposed to. This meant that upon release we were targets for several thousand feet instead of several hundred.

Our glider pilot headed down fast to avoid ground fire and also to beat others to landing sites. Just as we were about to land another glider below us landed where our pilot had picked to land. So he banked to the left and tried to fly over some trees and land on the other side. He clipped the trees about 3/4 from the top. I heard the crashing sound of our glider hitting the trees, and I thought, "This is it; we are dead!" After we hit the ground, I looked around and I was still alive. My right arm hurt and I thought it was broken but I could wiggle my fingers so I guessed it was OK. My Tommy gun (Thompson sub-machine gun) and the metal clip board that contained all the secret communications codes were gone.

I started to get up but a pain in my foot shot through my leg. It was pinned beneath the trailer wheel that had broken through the wooden floor of the glider. Some medics came by and released my leg. They removed the two pilots and laid them on the ground.

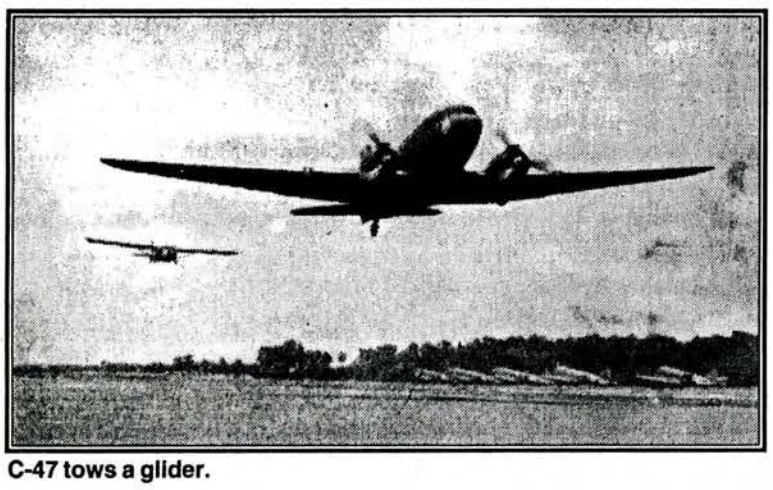

C-47 tows a glider.

They were foaming at the mouth and dead. They took me and others in my squad to the aid station. I was in a lot of pain until a medic came by and took a small tube with a needle from my first aid kit and injected it in my arm. The pain soon went away and I went to sleep. The next thing I remember I was in a tent hospital. I was not hurt as badly as others. I was scheduled for an operation on my toe but x-rays showed that it was not broken, so they did not operate. We received the Purple Heart for injuries received in combat. The 517th, in the meantime, had fought their way to the Italian border.

Since the front lines were far away now, the evacuation hospital decided to move closer to the front line and send all their remaining patients back to Italy. My paratrooper friend and I decided that since we had just arrived in France we did not want to go back to Italy. So we grabbed our knapsacks and walked out of the hospital. We found a supply depot so we stole rations and whatever we thought we might need and hitch-hiked to Nice. There we stopped an officer and driver and asked if they knew where the 517th and 442nd were. The officer said, yes, that he was from the 517th and he would return both of us to our outfits. But first, he was on a reconnaissance mission to see if a bridge on the other side of town was still intact. He told me to get on at the jeep mounted machine gun in case we encountered sniper fire going through town. Luckily we drew no fire so we turned around and headed back to our outfit. We did get some sniper fire on the road but it did no damage.

When I returned to the company everyone was surprised to see me because they thought I was still in the hospital. Actually, I was AWOL from the hospital and may be the only reverse AWOL in the history of the 442nd.

My personal experience as an airborne troop in the invasion of southern France
Minoru 'Chappie' Kishaba

At the secret airfield in Italy our squad went into the gliders to tie down all our equipment. "Butterman" Hamamoto and I were assigned to a jeep, so we made sure it was secured properly.

On "D" Day I was assigned to K.P. duty and I fed the paratroopers at 4:00 A.M. I could feel the tension in the air and as the paratroopers came in with their mess kits, they were orderly and they kept their voices almost to a whisper. To each one as I served him, I said, "Good Luck" and they looked at me and thanked me. I felt the camaraderie with them not knowing what really lay ahead in the "Invasion" and wishing for safety and a successful mission.

As our gliders took off for southern France, we were very apprehensive and the atmosphere was full of anxiety and concern. "Will we be able to handle the job as airborne invaders?" "Will we come through safely?" As we flew over the Mediterranean Sea it was calm except for the droning of the C-47 pulling us. I could see the other members of my squad on the other gliders. We waved to each other. I felt a soothing assurance that I was not alone and I had great comrades whom I could depend on.

As we approached the sea coast of southern France, my heart started beating faster when I saw the coastal area smoldering from the bombardment of the Navy and air bombers pulverizing the enemy defenses. I prayed to God to protect us and keep us safe and make this invasion a success. In times like these I always prayed; in Italy and throughout the war. I'm thankful that God was mindful of me through all the major battles we encountered.

When we were flying farther inland, the countryside of France was beautiful, green and picturesque. Then the pilot said we are going to be detached from the C-47. My heart was beating faster. Then all of a sudden everything became real quiet as we were released and now on our own. As we approached the landing site I could see many parachutes hanging from tree tops. Now fear crept up. "Were the paratroopers successful in taking the landing site?" As we got closer there were "many" gliders also on tree-tops: some split in two, others hanging upside down and some draped on trees as if thrown against the forest, not head-on but belly first. I felt a little panicky. I could see the side of the pilot's face as sweat was rolling down his forehead and temple. Then as he banked the glider to the left to land, the tip of the wing scraped the alfalfa plants which were not completely harvested and the glider made an abrupt turn. I thought, "This is it", but the pilot was able to straighten out and make a perfect landing. As soon as we landed I unbuckled myself and jumped into an irrigation ditch. When I looked up I saw the glider that "Rugged" Miyakawa and Milton Kondo were on hit the ground almost head first and tip over. Then the glider that Masato Doi and "Stud" Oshiro were on landed sideways and came to a dust hurling stop. Just in back of me a glider landed in a cornfield which was harvested but the stalks were dry and tall. It crashed into the cornstalks and I saw bodies flying out. Then another glider following came crashing through and the left wing hit a tree a few feet from me. It spun around and seemed to mangle the bodies of the first glider. I didn't hear or see anybody yell or move, so I ran into the cornfield to see if I could help. Butterman was following me and saw that the soldiers were dead. It was a "Haole" outfit. We ran back to our glider and unloaded the jeep. Then "Rugged" came over and said their two pilots were dead and Kondo was hurt with bruised ribs. Peewee Morimune was wandering around by the tree lines. He said his glider smashed into the trees and he was dazed. He said "Hotsauce" Mizusawa was badly hurt and was taken to the aid station. So Butterman and I took Kondo and Peewee to the aid station on our jeep. We searched for our squad to regroup. Someone said Lieutenant Scotland's glider was hanging in a tree with him in there. They brought him down and our platoon and squad were successfully regrouped.

Forum
COMMUNITY ACTIVITIES AND PERSPECTIVES

Page 4

A Moment With Momo

by

Momoko Murakami

Antitank Company - Part 3

While being towed, cruising speed is 80 mph and once released from the C-47 tug planes a glider comes down at approximately 70 mph depending on the load it is carrying. Combat gliders did not glide, they just descended. The heavier the load the faster they descended.

The gliders' main function was to transport men, fuel, ammunition, Jeeps and medical supplies. All the information that the glider gladiators had of their landing areas was gleaned from aerial photos of these areas. Aerial photos are two dimensional representations of three dimensional surfaces. They do not indicate height. What looked like bushes were tall trees, 200-300 feet high. The terrain was also covered with grape arbors of stout timber and hedgerows that were higher than what they could interpret from the aerial photos.

The main landing field for these men was Le Muy. Dave Kawagoye's glider was supposed to land in a smaller field next to it and it did land there. Fortunately the area had been cleared. The Germans, fearing surprise landings, had studded these fields with anti-glider poles called "Rommel's asparagus." About twelve feet high, they were arranged in rows 15 to 40 feet apart and connected by wires which when hit were intended to activate mines planted at their bases. These mines were not always fused; further the methodical Germans placed them in very regular intervals. A glider's wing span is almost 84 feet. By shearing off the wings of the glider, a skilled or lucky pilot could bring his glider down with his load intact. In the case of Kawagoye's assigned landing field, the FFI (French Forces of the Interior) had removed the poles. The field itself had already been secured by the paratroopers. They go first and secure the airfield for the gliders which bring the machinery, equipment and supplies. It was still a hard landing.

Upon landing each man proceeded with his assigned mission. Gliders were unloaded and crews headed for their pre-arranged company assembly area. Nine men were injured and six were evacuated for treatment.

Squads were re-grouped. Minoru "Chappie" Kishaba's squad was positioned in a wine cellar overlooking the valley of Le Muy.

The next "afternoon we got word that the Airborne made physical contact with the Seaborne invaders, and they got ready to barrage the Le Muy Valley. At around 7:00 P.M. we all took cover and the barrage started. Shells came whistling over our heads and exploded in the Valley. The whole Valley erupted. Our Navy, the Seaborne Artillery and the Airborne Artillery fired into the Valley. It was a spectacular exhibition of fire-power. I didn't think anything could survive such devastation. Seems like every square foot was up in smoke and dust. It lasted for 15 minutes.

"About an hour or so later we saw Sherman tanks rolling into the Valley. I was so relieved and excited. The Germans retreated up North as the Seaborne pursued. The Invasion was a great success and we accomplished our mission."

The company was relieved of its mission and moved to a bivouac area one mile south of Le Muy. Their stay here was largely a holding action. To forestall any enemy infiltration, the 2nd and 4th platoons were given positions blocking the road between Le Muy and the 517th Regimental Command Post. Frank Seto was in gun position where the Germans were expected to come through on this road. It was expected that the sea landing would force them down this road and Frank Seto's group was to corner them in a pocket. Instead he challenged a colonel who had come looking for blankets for the paratroopers. The colonel ordered him to fire because a sniper was in a house nearby. Frank Seto fired his Browning Automatic Rifle but does not think he hit the house. Dave Kawagoye and some of his men went scouting for Germans in other nearby houses. More likely, information would be received that five Germans were in a house at a certain place or six Germans were in a house someplace else. Patrols would set forth and capture them. Men would be on a reconnaissance mission and encounter Germans who would be taken prisoner. They also swept for mines and booby traps.

The first encounter that the people of L'Escaréne and Pierra Cava had with any member of the 100/442 Regimental Combat Team occurred in September 1944 when a stationary line was established in the Maritime Alps and the 1st platoon of the Antitank Company took positions in the vicinity of Pierra Cava, the 2nd platoon was at Luceram, the 3rd platoon was at Col de Braus, and the 4th platoon guarded the tunnel entrance at Touet de l'Escaréne and the company command post was located at the railroad station in L'Escaréne. Stationed in these places until mid-October they became acquainted with the local populace and the watering holes. It was here that Frank Seto claims he learned his sophisticated manners from a French girl whose family had a wine bar in Roquebrune which he patronized every night to quench his thirst after a hard day of guarding against infiltrating Germans.

On October 27 the Antitank Company rejoined the 442 RCT in Bruyères. Because of the snow covered, wooded, hilly, terrain, enemy tank action was rendered