REVISIONS				
ZONE	REV.	DESCRIPTION	DATE	APPROVED
-	A	DRAWING RELEASE		
	B	Added hendle bar	2/4/2016	
	C	Added releve cut	2/4/2016	
	D	Gauge changed to 22	2/18/2016	

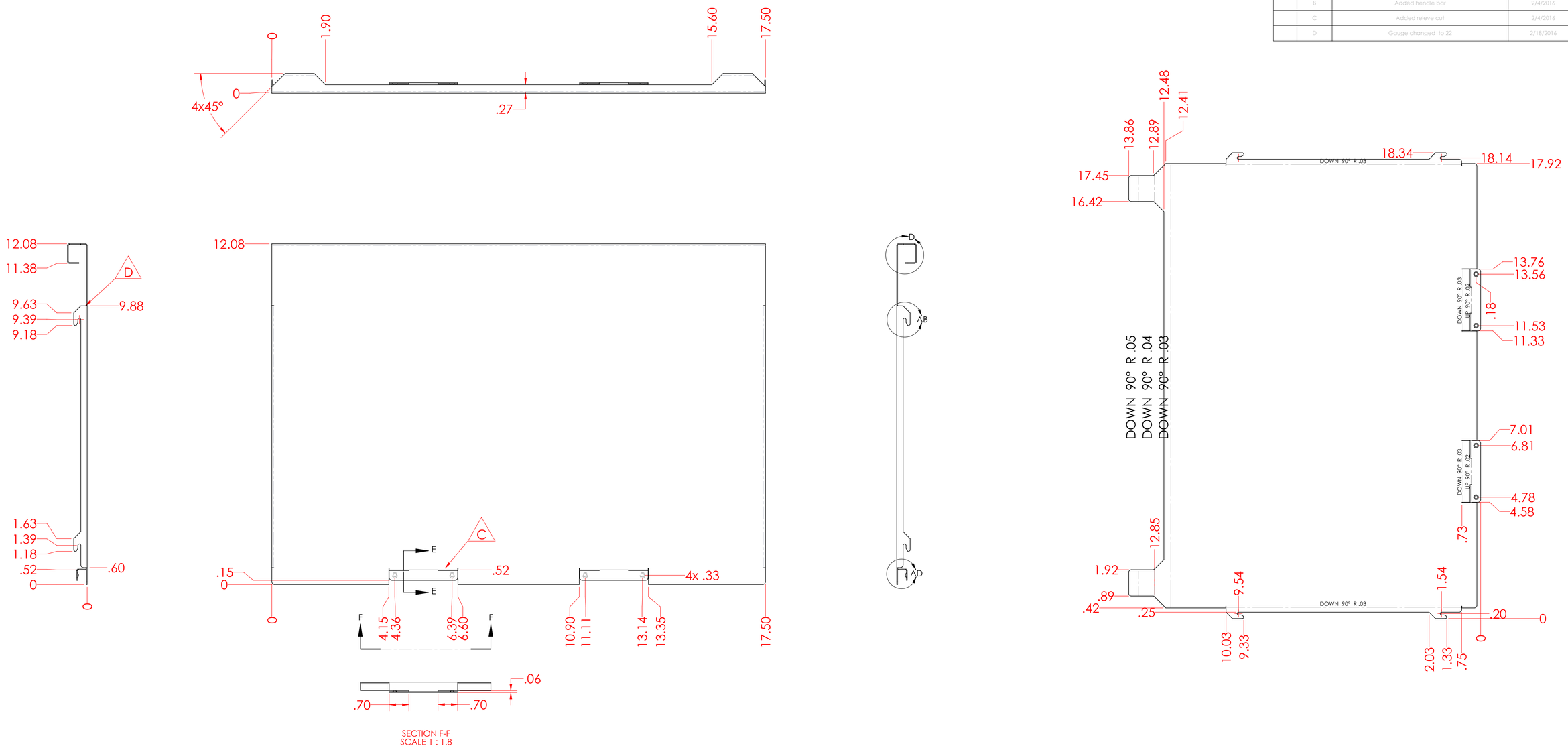

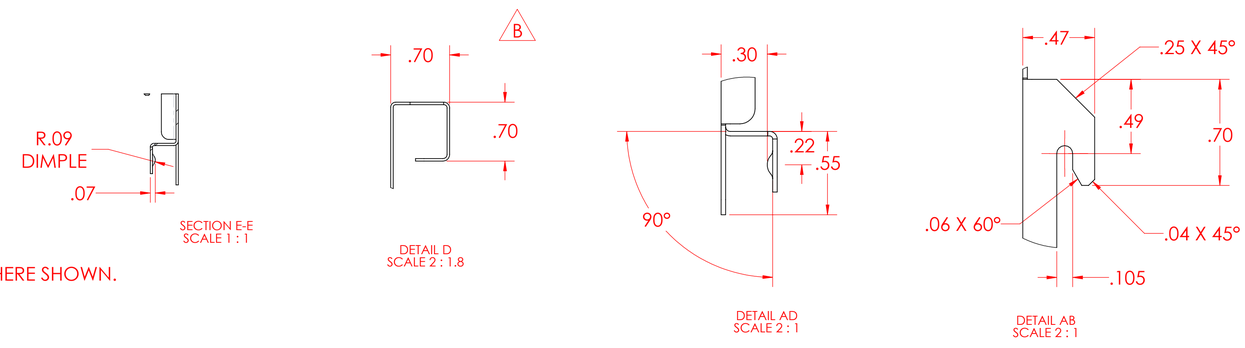

NOTES:

1. DEBURR AND BREAK ALL SHARP EDGES.
2. MARK PART WITH P/N AND LATEST REVISION LEVEL WHERE SHOWN.

FINISH:
RED GLOSS POWDER COAT, T009-RD03

		UNLESS OTHERWISE SPECIFIED DIMENSION ARE IN INCHES: .X - ±0.3 .XX - ±0.1 .XXX - ±.005 ANGLES ±1.0° ALL DIMENSION & TOLERANCES APPLIES AFTER THE PLATING PROCESS. DEBURR & BREAK SHARP EDGES .005 R MAX. PER ASME Y14.5 M-1994		NAME	DATE
			DRAWN	P Zaruba	3/15/2015
			CHECKED	Tim N.	12/27/2015
			ENG APPR.		
			MFG APPR.		
			Q.A.		
		INTERPRET GEOMETRIC TOLERANCING PER:	COMMENTS:		
		MATERIAL 1023 Sheet Steel, GA 22			
NEXT ASSY	USED ON	FINISH See Note			
APPLICATION					

500 Ben Franklin Ct,
San Mateo, CA 94401

TITLE: Rear Cover

SIZE	DWG. NO.	REV
D	BBEVE25293	D

SCALE: 1:1.5 WEIGHT: SHEET 1 OF 1